JOB_____ ITEM #_____

Blooming Onion FRYERS

America's Oldest Stove Company
(Est.1838)

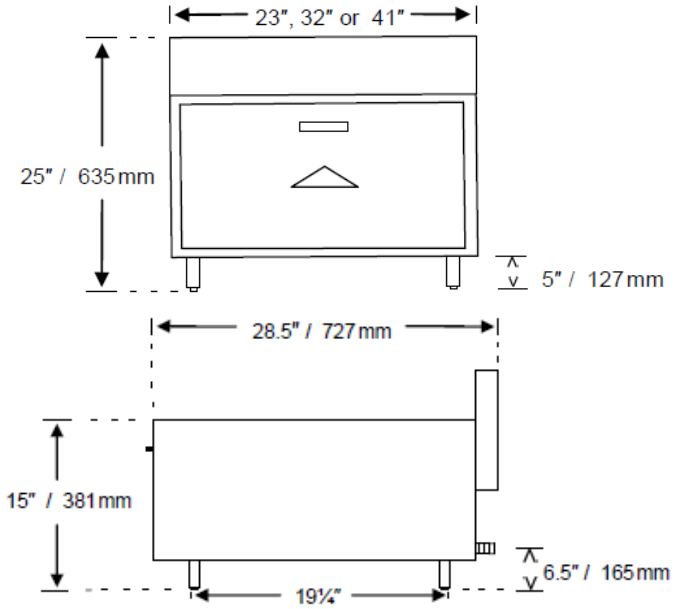

Model 2923DF

Standard Features & Benefits

CONSTRUCTION: Easy cleaning, corrosion resistant stainless steel finish, welded with aluminized inner framing. Double wall construction with heavy insulation combined with a special flue design for cooler operation. Adjustable 4″ stainless steel legs for easy leveling. Installation clearances for non-combustible surfaces are 2″ on sides and 6″ in the rear, combustible surface clearances are 6″ and 6″. Hinged front door panel protects controls.

BURNERS: Long life, cast iron "H" pattern burners combined with a special "V" shaped tank design directs heat for excellent air circulation.

CONTROLS: Snap Action thermostat for fast recovery, 100% safety shut off, high limit control for back-up safety, automatic standing pilot and brass burner valves. Pressure regulators are set at the factory for natural gas and easily convertible to propane. Optimal pressures are 4″ WC for natural gas and 10″ WC for propane. Manifold size is ¾″ NPT. All controls are tested and confirmed in good working order. Calibration and adjustments are the responsibility of the installer. Gas outlet located 2" from the right side as viewed from the front.

TANK: Easy cleaning, corrosion resistant stainless steel with angled bottom ¾″ gate valve for rapid draining.

ACCESSORIES: Single large baskets, stainless steel tank covers, gas hoses, cleaning supplies, equipment stands and casters are listed in the price list.

FLOOR MODELS: Tubular stainless steel legs and stainless steel stabilizing under shelf to bring the tank surface to 36″.

SPECIFICATIONS				
Model		**2923DF**	**2932DF**	**2941DF**
Width	in.	23	32	41
	mm	584	813	1054
Depth	in.	28.5	28.5	28.5
	mm	724	724	724
Height	in.	24	24	24
	mm	610	610	610
Approx. Ship Weight	lbs.	145	180	215
	Kgs	66	82	98
Total BTU		60,000	90,000	120,000
TANK INTERIOR				
Width	in.	20.25	29.25	38.25
Height	in.	8.25	8.25	8.25
Length	in.	21	21	21
FRYER TANK FILL CHART GUIDE				
Gallons		5 - 6	7 - 9.5	9.5 - 12
Liters		20 - 23	26 - 34	36 - 46
Pounds		40 - 48	54 - 72	76 - 96
Kilograms		18 - 22	24 - 32	34 - 44

NOTICE: In an ongoing effort of product development & improvement, Comstock-Castle reserves the right to change specifications and product design without notice. Such modifications do not entitle the buyer to corresponding changes or replacements for previously purchased equipment.

Comstock-Castle Stove Co. • 119 W. Washington St. • Quincy, IL. 62301
Tel.: 217-223-5070 • **Fax.:** 217-223-0007 • **Web:** www.castlestove.com