America's Oldest Stove Company
(Est.1838)

JOB _____ ITEM # _____

BAKE OVENS

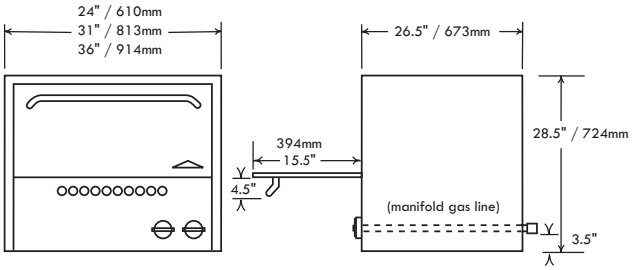

Model B19N - 220 lbs. / 100 Kgs.
Model B26N - 250 lbs. / 114 Kgs.
Model B31N - 275 lbs. / 125 Kgs.

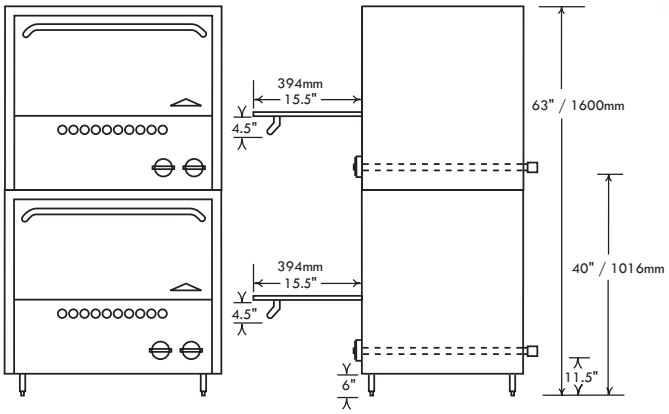

Model 2B19N - 450 lbs. / 205 Kgs.
Model 2B26N - 525 lbs. / 239 Kgs.
Model 2B31N - 580 lbs. / 264 Kgs.

B31N

2B31N
(shown with optional casters)

Standard Features, Benefits & Options

CONSTRUCTION: Easy cleaning, corrosion resistant stainless steel finish, welded with angle iron and aluminized inner framing. Double wall construction with heavy insulation for cooler operation. Installation clearances for non-combustible surfaces are 0″ on sides and 0″ in the rear, combustible surface clearances are 6″ and 6″.

OVENS: All ovens measure 20.5″ deep by 14″ high. Large oven measures 31.5″ wide, for the best baking characteristics and results. Medium oven measures 26.5″ wide and small oven measures 19.5″ wide. Heavy insulation for fuel efficiency, porcelain and aluminized linings for easy cleaning and heat reflection.

BURNERS: Long life, cast iron "H" pattern burner is combined with a special "V" shaped baffle directing heat for excellent air circulation. Large and medium ovens feature 30,000 BTU, small ovens feature 25,000 BTU burners.

CONTROLS: Includes 550° thermostat, 100% safety shut off, automatic standing pilot and brass burner valves. Pressure regulators are set at the factory for the gas specified. Optimal pressures are 4″ WC for natural gas and 10″ WC for propane. Manifold size is ¾″ NPT. All controls are tested and confirmed in good working order. Calibration and adjustments are the responsibility of the buyer.

ACCESSORIES: Convection fans, extra racks, gas hoses, flue adapters, draft diverters, carrying handles, knob protectors, matching stands and casters are listed in the price list.

VERSATILITY: Castle bake ovens are stackable in the field or from the factory. Factory ordered stacking ovens come with a 6″ high leg base. Leg base is required when stacking in the field.

NOTICE: In an ongoing effort of product development & improvement, Comstock-Castle reserves the right to change specifications and product design without notice. Such modifications do not entitle the buyer to corresponding changes or replacements for previously purchased equipment.

Comstock-CastleStoveCo.•119W.WashingtonSt.•Quincy,IL.62301
Tel.:217-223-5070•Fax:217-223-0007•www.castlestove.com