In order to provide the best service, ATOSA requests that please register your warranty online at www.atosausa.com

For any service issues,please kindly contact us at

Email:warranty@atosausa.com

or

Toll Free:+1-800-683-8660

Please clean the filter frequently!

Please do not overload the unit!

INSTRUCTION MANUAL
VERTICAL COOLER

Top Mount REACH-INS
Bottom Mount REACH-INS

Content:

1.Terms and conditions.....2

2.Preface.....6

3.Use of the equipment.....9

4.Technical features.....9

5.Operation.....9

6.Control unit.....10

7.Handling.....10

8.Installation procedure.....11

9.Connecting to the main power supply.....11

10.Maintenance instructions.....12

Cleaning.....12

Cleaning the refrigerator surface.....12

Cleaning the inside of the refrigerator.....13

Cleaning the condenser.....13

11.Troubleshooting.....13

12.Technical service.....13

13.Configuration Sketch Map.....14

Operating Instruction.....14

Technical Parameters.....20

Official Approval And Rules.....22

1 TERMS AND CONDITIONS:

Refrigeration

2 YEAR WARRANTY

All claims for parts or labor must be made directly through Atosa.All claims must include: model number of the unit, the serial number, proof of purchase, date of installation, and all pertinent information supporting the alleged defect.In case of compressor replacement under warranty, either compressor or compressor tag must be returned to Atosa along with above listed information.Failure to comply with warranty policies will result in voiding claims.

Two Year Parts & Labor Warranty

Atosa warrants all new refrigerated components, such as the cabinet and all parts, to be free from defects in materials or workmanship. Atosa 's obligation under this warranty is limited to a period of two (2) years from the date of original installation or 27 months after shipment date from Atosa, whichever occurs first.All parts covered under this warranty that are defective within two (2) years of original installation or twenty seven (27) months after shipment date from manufacturer, whichever occurs first, are limited to repair or replacement (including labor charges, of defective parts or assemblies). The labor warranty shall include standard straight time labor charges only and reasonable travel time, as determined by Atosa.

Additional Three Year Compressor Warranty

In addition to the two (2) year warranty stated above, Atosa warrants its sealed compressor to be free from defects in both material and workman ship under normal and proper use and maintenance service for a period of three (3) additional years from the date of original installation, but not to exceed five (5) years. Compressors that have been determined to be defective from Atosa within this extended period will be either repaired or replaced with a compressor or compressor parts of similar design and capacity according to Atosa ‘s discretion.The three (3) year extended compressor warranty applies only to sealed parts of the compressor and does not apply to any other parts or components. This includes, the cabinet, paint finish, temperature control, refrigerant, metering device, motor starting equipment, fan assembly, and other electrical components, etc.

R290 Compressor Warranty

The five-year compressor warranty detailed above will be void if the following procedure is not carefully adhered to:

1. This system contains R290 refrigerant and lubricant. The lubricant has rapid moisture absorbing qualities.
2. Drier replacement is very important and must be changed when a system is opened for servicing.
3. Micron level vacuums must be achieved to insure low moisture levels in the system.
4. Compressor must be obtained through Atosa, unless otherwise specified in writing, through Atosa’ s warranty department.

What is Not Covered by This Warranty

Atosa ‘s sole obligation under this warranty is limited to either repair or replacement of parts, subject to the additional limitationsbelow. This warranty neither assumes nor authorizes any person to assume obligations other than those expressly covered by thiswarranty.

NO CONSEQUENTIAL DAMAGES: ATOSA IS NOT RESPONSIBLE FOR ECONOMIC LOSS; PROFIT LOSS; OR SPECIAL,INDIRECT, OR CONSEQUENTIAL DAMAGES, INCLUDING WITHOUT LIMITATION, LOSSES, OR DAMAGES ARISING FROMFOOD OR PRODUCT SPOILAGE, REGARDLESS OF WHETHER OR NOT THEY RESULT FROM REFRIGERATION FAILURE.

WARRANTY IS NOT TRANSFERABLE: This warranty is not assignable and applies only in favor of the original purchaser/user towhom delivered. ANY SUCH ASSIGNMENT OR TRANSFER SHALL VOID THE WARRANNTIES HEREIN AND SHALL VOID ALLWARRANTIES, EXPRESS OR IMPLIED, INCLUDING ANY WARRANTY OF MERCHANTABILITY OR LABOR COVERAGE FORCOMPONENT FAILURE OR OTHER THE WARRANTY PACKET PROVIDED WITH THE UNIT.

ALTERATION, NEGLECT, ABUSE, MISUSE, ACCIDENT, DAMAGE DURING TRANSIT OR INSTALLATION, FIRE, FOOD,OR ACTSOF GOD:Atosa is not responsible for the repair or replacement of any parts that are determined to have been subjected afterthe date of manufacture to alteration, neglect, abuse, misuse, accident, damage during transit or installation, fire, flood, or act of God.

IMPROPER ELECTRICAL CONNECTIONS: Atosa IS NOT RESPONSIBLE FOR THE REPAIR OR REPLACEMENT OF FAILED OR DAMAGED COMPONENTS RESULTING FROM ELECTRICAL POWER FAILURE, THE USE OF EXTENSION CORDS, LOW VOLTAGE, OR VOLTAGE DROPS TO THE UNIT. THE TWO (2) YEAR PARTS & LABOR WARRANTY AND THE ADDITIONAL THREE (3) YEAR COM-PRESSOR WARRANTY ARE AS DESCRIBED ABOVE. THESE WARRANTIES ARE EXCLUSIVE AND IN LIEU OF ALL OTHER WARRANTIES, INCLUDING IMPLIED WARRANTY AND MERCHANTABILITY OR FITNESS FOR A PARTICULAR PURPOSE. THERE ARE NO WARRANTIES WHICH EXTEND BEYOND THE DESCRIPTION ON THE FACE HEREOF.

Outside U.S. and Canada: This warranty does not apply to areas outside the continent of the United States. Atosa is not responsible for any warranty claims made on products sold or used in such areas.*In some cases, a 25% restocking fee may be charged to a buyer for returned items.*Atosa may at any time modify our equipment in order to provide and insure a superior product. Change is sometimes necessary to keep up with today's high standards in our industry. Atosa reserves the final interpretation of all public materials.

2. Preface

Please read instructions before using this appliance.

IMPORTANT SAFETY INSTRUCTION

▲ To reduce the risk of fire, electric shock, or injury to persons when using your product, basic safety precautions should be followed, including the following.

▲ This appliance must be properly installed and located in accordance with the Installation Instruction before it is used.

▲ Before the appliance is plugged in, ensure that the rated voltage corresponds to the voltage of the electrical system in your home. The power plug should have its own independent socket. Using adapters may cause overheating or burning.

▲ This appliance can be used by children aged from 8 years and above and persons with reduced physical, sensory or mental capabilities or lack of experience and knowledge if they have been given supervision or instruction concerning use of the appliance in a safe way and understand the hazards involved.

▲ Children shall not play with the appliance.

▲ Cleaning and user maintenance shall not be made by children without supervision.

▲ If the supply cord is damaged, it must be replaced by the manufacturer or its service agent or a similarly qualified person in order to avoid a hazard.

▲ Connect to properly grounded outlets only. Avoid the use of extension cords. Do not run cord under carpeting, runners or the like. Arrange cord away from traffic area and where it will not create a tripping hazard.

▲ Always unplug appliance when not in use and before cleaning, adjusting or maintaining this machine. To disconnect appliance, turn switch off and remove plug from power source.

▲ Do not disconnect by pulling on the cord. Always disconnect by grasping and pulling on the plug top.

▲ Do not pull out the cord or touch the power plug with wet hands. Clean water or dust from the power plug and insert it with the ends of the pins securely connected.

▲ Do not use outdoors.

▲ Do not splash water on the appliance. It may cause a malfunction or electric shock.

▲ Do not disassemble, repair or alter the appliance. It may cause fire or abnormal operations, which may lead to injury.

▲ After your fridge-freezer is in operation, do not touch the cold surfaces in the freezer compartment, particularly when hands are damp or wet. Skin may adhere to these extremely cold surfaces.

▲ Never place glass products in the freezer because they may be broken when their inner contents are frozen.

▲ The refrigerant and insulation blowing gas used in the appliance require special disposal procedures. When disposal, please consult with service agent or a similarly qualified person.

▲ Do not store explosive substances such as aerosol cans with a flammable propellant in this appliance.

▲ WARNING: Keep clear of obstruction all ventilation openings in the appliance enclosure or in the structure for building-in.

▲ WARNING: Do not use mechanical devices or other means to accelerate the defrosting process, other than those recommended by the manufacturer.

▲ WARNING: Do not damage the refrigerant circuit.

▲ WARNING: Do not use electrical appliances inside the food storage compartments of the appliance, unless they are of the type recommended by the manufacturer.

Warning: Risk of fire / flammable materials

CAUTION: RISK OF FIRE AND EXPLOSION WITH FLAMMABLE REFRIGERANT R290.

▲ If you need the electronic version instruction manual, please ask the manufacturer or its service agent .

▲ Max. Load of shelf is 176 LBS.

This instruction manual provides all the necessary information regarding:

▲ use of the refrigerator

▲ technical specifications

▲ installation and handling

▲ operator procedures and instructions

▲ maintenance operation

The manual is to be considered an integral part of the refrigerator and should be stored in a safe place for father consult to permit a good working life of the refrigerator.

The appliance is intended for commercial use only.

■ Component parts shall be replaced with like components and that servicing shall be done by factory authorized service personnel.

The manufacturer cannot be held liable in the following cases:

■ improper installation (not in accordance with the guidelines indicated herein)

■ misuse of the refrigerator

■ power supply defects

■ improper or inadequate maintenance

■ unauthorised modification or tampering

■ use of non-original spare parts

■ partial or total failure to comply with the instructions

All electrical equipment can be hazardous to health. Current standards and legal requirements must be complied with during the installation and use of any equipment.

3. Use of the equipment

The refrigerator are for preserving fresh perishable foodstuffs, with an in-built refrigerated unit.

Do not utilise the equipment to store medical supplies.

The optimum operational ambient temperatures are between +10℃ / +40℃.

4. Technical features

The refrigerator is a ventilated system, the evaporator is in a separate insulated box on the top. All the materials used in the manufacture of this unit are guaranteed to be suitable for use with foodstuffs. The gases used in produces is R290.The refrigerating circuit are in compliance with the current normative.

5. Operation

The gas in the refrigerating circuit is in the first time compressed, liquefied and then evaporated in the ventilated evaporator, situated on the top of the container.

This cycle involves the absorption of heath from the air in the refrigerator compartment and the reason is cooled. The heat produced is then dissipated to the outside environment by a condenser unit located on the top of the refrigerator.

6. Control unit

The refrigerator is command from a “digital control unit” and a “main switch pilot light” in the top panel of the refrigerator.

The “main switch pilot light” is for turning on the power supply.

The green pilot light comes on to indicate that the unit is connected to the main electricity and to start work.

The green pilot light comes off to indicate that the unit is disconnected and don’ t work. The “digital control unit” is for the regulation of all parameters to provide the correct working of the refrigerator. Please consult all parameters in the attachment manual of the “digital control unit”.

This manual is part of the instruction manual and is very important in case of service.

7. Handling

The refrigerator arrive in PET film and packed in cardboard box on a wood pallet.

The refrigerator must be transported and handled with care to avoid posing a hazard to persons or property.

Never place a refrigerator with an in-built refrigerated unit on its side or turn it upside down as this may damage or impair operation of the refrigerated unit.

We can not held liable for any damage or defects arising directly or indirectly from improper handling of the equipment or non-compliance with the safeguards illustrated above.

8. Installation procedure

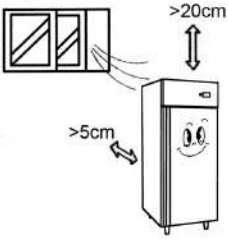

▲ Place the refrigerator in the coolest and best ventilated part of the room. Don’ t install the refrigerator in the near of heat and direct sunlight sources.

▲Remove the straps securing the cardboard packing Remove the cardboard. Covering Remove the PET protection film

▲Clean the refrigerator with mild detergent and then dry it with a soft cloth.

9. Connecting to the main power supply

This operation must be carried out by professionally and qualified persons.

The refrigerator are supplied complete with a power supply cable for the connection to the main power supply. A thermomagnetic circuit breaker (not supplied) must be installed between the mains power point and the power supply cable of the refrigerator.

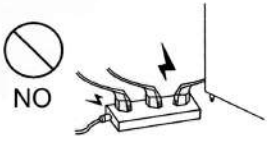

Before proceeding make sure that:

▲ the mains voltage corresponds to the voltage on the refrigerator 115V/60Hz/1Ph; to ensure proper operation it is essential for the power supply voltage to come within a range of +/- 10% of the unit’s rated voltage

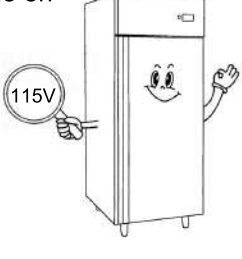

▲ the electric system to which the refrigerator is sized to cater for the rated electric output of the buffet unit being installed

▲ the electronic system to which the refrigerator is connected is made in compliance with current standard requirements

▲ the electric connections and the installation of the thermomagnetic circuit breaker have been done by qualified person.

Connecting steps:

▲ Install a thermomagnetic circuit breaker suited to the rated output of the unit being installed

▲ Connect the refrigerator unit to the thermomagnetic circuit breaker outlet

▲ Check that the refrigerator is in order as demonstrated by the pilot light incorporated in the main switch coming on

10. Maintenance instructions

The smooth operation and life of the equipment are mainly determined by correct and regular maintenance

Cleaning:

Regular cleaning of the refrigerator unit is strongly recommended each month. Please follow the instructions below.

Disconnect the refrigerator power supply cable from the mains prior to carrying out any type of cleaning operation.

Cleaning the refrigerator surface:

Clean the refrigerator with mild detergent and then dry it with a soft cloth.

Do not use abrasive detergents!

Cleaning the inside of the refrigerator:

Clean the inside area min. each month with a detergent suitable for use with foodstuffs.

Cleaning the condenser:

For an efficient operation of the refrigerator it is advisable to clean the condenser regularly approx. every 4 months with a dry brush or vacuum cleaner.

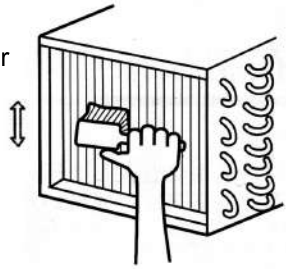

11. Troubleshooting

Refrigerator stops working (light off):

☆ Power supply failure

▲ Remedies:

☆ Check that the plug is inserted properly in the socket

☆ Check that the switch on/off

☆ Check that the mains voltage powers the plug

Refrigerator temperature go up:

☆ Unit to near to a heat source

☆ Condenser dirty or close

▲ Remedies:

☆ Move the counter or the heat source further away

☆ Clean the condenser

12. Technical service

For technical service please contact the dealer technical department and give him the serial n°, and the date of buy.

13. Configuration Sketch Map

Top Mount Reach-Ins

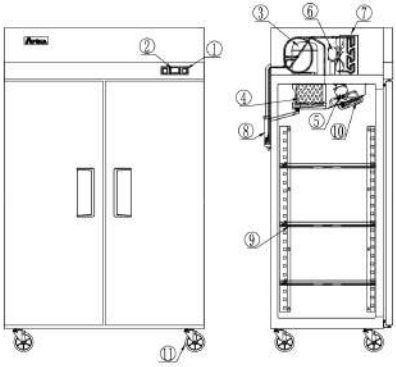

Bottom Mount Reach-Ins

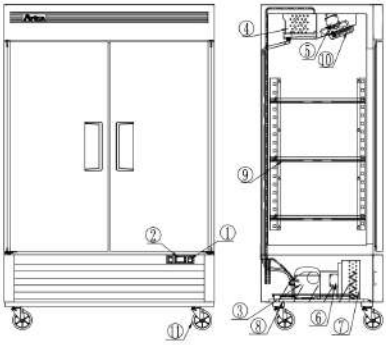

1. Power switch
2. Microcomputer controller
3. Compressor
4. Evaporator
5. Evaporator fan motor
6. Condenser fan motor
7. Condenser
8. Drain case
9. Shelf
10. Lamp
11. CASTER

Operating Instruction

1. New upright air-cooling refrigerator should be opened and ventilate it before it is in use. After that, users should use warm water clean its inside.
2. After connecting the power supply, press the "POWER" switch on the controller keyboard (Green Indicator Light ON), the fridge will come to work. The microcomputer controller, installed in the controller keyboard, could automatically adjust the temperature ranges. This intelligent digital controller works as: if the temperature increases and reaches set point plus differential the compressor is started and then turned off when the temperature reaches the set point value again.

3. Microcomputer Controller Operation Instruction:
4. Microcomputer panel sketch map, meanings of running indicator light and LED showing.

(Mod. XR06CX)

5. SET To display target set point, in programming mode it selects a parameter or confirm an operation.

❄ To start a manual defrost。

△ In programming mode it browses the parameter codes or increases the displayed value .

▽AUX In programming mode it browses the parameter codes or decreases the displayed value .

▽+△ To lock or unlock the keyboard

SET+▽ To enter in programming mode

SET+△ To return to room temperature display .

LED	MODE	SIGNIFICATO
❄	On	Compressor enabled
	Flashing	Anti short cycle delay enabled (AC parameter)
❄	On	Defrost in progress
	Flashing	Dripping in progress
✣	On	Fans output enabled
	Flashing	Fans delay after defrost
°C	On	Measurement unit
	Flashing	Programming mode
°F	On	Measurement unit
	Flashing	Programming mode

6. How to see the point .
   Push and immediately release the SET key, the set point will be showed;
   Push and immediately release the SET key or wait about 5s to return to normal visualisation.
7. How to change the setpoint .
   Push the SET key for more than 2 seconds to change the Set point value;
   The value of the set point will be displayed and the “°C” or “°F” LED starts blinking;
   To change the Set value push the △ or ▽AUX arrows.
   To memorise the new set point value push the SET key again or wait 10s.
8. How to start a manual defrost .
   Push the DEF ❄ key for more than 2 seconds and a manual defrost will start .

9. How to change a parameter value

To change the parameter's value operate as follows:

Enter the Programming mode by pressing the SET+▽ keys for 3s ("°C" or "°F" LED starts blinking).

Select the required parameter. Press the "SET" key to display its value

Use △ or ▽AUX to change its value.

Press "SET" to store the new value and move to the following parameter.

To exit: Press SET+△ or wait 15s without pressing a key.

NOTE: the set value is stored even when the procedure is exited by waiting the time-out to expire.

10. To lock the keyboard .

Keep pressed for more than 3s the ▽+△ keys.

The "OF" message will be displayed and the keyboard will be locked.

If a key is pressed more than 3s the "OF" message will be displayed.

11. To unlock the keyboard .

Keep pressed together for more than 3s the ▽+△ keys till the "on" message will be displayed .

12. Alarm signalling .

Mess.	Cause	Outputs
"P1"	Room probe failure	Compressor output according to "Cy" e "Cn"
"P2"	Evaporator probe failure	Defrost end is timed
"HA"	Maximum temperature alarm	Outputs unchanged
"LA"	Minimum temperature alarm	Outputs unchanged
"EA"	External alarm	Outputs unchanged
"CA"	Serious external alarm	All outputs OFF
"dA"	Door Open	Compressor and fans restarts

CAREL: PJEZ*

Display and functions:

During normal operation, the controller displays the value of the probe set using parameter/4(=1 ambient probe, default,=2 second probe, =3 third probe).In addition, the display has LEDs that indicate the activation of the control functions(see Table 1),while the 3 buttons can be used to activate/deactivate some of the functions (see table 2).

LEDs and associated functions Tab.1

icon	function	normal operation			start up
		ON	OFF	blink	
	Compressor	on	off	request	ON
	fan	on	off	request	ON
	defrost	on	off	request	ON
AUX	aux	output on	output off	-	ON
	alarm	all	no alarm	-	ON
	clock	RTC fitted and enabled,at least 1 time band set	RTC not fitted or disabled,not even 1 time band set	-	ON if RTC fitted

Table of functions activated by the buttons Tab.2

button		normal operation		start up	
		pressing the button alone	pressed together		
	up ON/OFF	more than 3s toggle ON/OFF	pressed together start/ stop continuous cycle	-	
	down defrost	more than 3s: start/stop defrost		Pressed together start parameter reset procedure	for 1s display firmware vers. code
mute set	set mute	-1s: display/set the set point -more than 3s: access parameter setting menu(enter password 22) -mute audible alarm (buzzer)	-		for 1s RESET current EZY set

Setting the set point(desired temperature)

- press SET for 1s the set value will start flashing after a few moments;
- increase or decrease the value using UP or DOWN;
- press SET to confirm the new value.

Switching the device ON/OFF

Press UP for more than 3s. the control and defrost algorithms are now disabled and the instrument displays the message "OFF" alternating with the temperature read by the set probe.

Manual defrost

Press for DOWN more than 3s (the defrost starts only the temperature c onditions are valid).

Continuous cycle

Press UP and DOWN together for more than 3s.

Table of alarms

Alam code	buzzer and alarm relay	LED	Description	Parametri coninvolti
E0	active	ON	probe 1 error=control	-
E1	inactive	ON	probe 2 error=defrost	[d0=0/1]
E2	inactive	ON	probe 3 error=condenser	[A4=10]
IA	active	ON	external alarm	[A4=10][+A7]
dOr	active	ON	open door alarm	[A4=7/8][+A7]
LO	active	ON	low temperature alarm	[AL][Ad]
HI	active	ON	high temperature alarm	[Ah][Ad]
EE	inactive	ON	unit parameter error	-
EF	inactive	ON	operating parameter error	-
Ed	inactive	ON	defrost ended by timeout	[dP][dt][d4][A8]
dF	inactive	ON	defrost running	[d6=0]
cht	inactive	ON	condenser dirty pre-alarm	[A4=10]
CHT	active	ON	condenser dirty alarm	[A4=10]
EtC	inactive	ON	clock alarm	

Our products have been modified precisely before leaving factory, so to avoid damaging compressor unit or other malfunctions, users mustn’ t modify the microcomputer parameters privately.

Technical Parameters

Top Mount Reach-Ins

Product Description	Model code	Power source (V)	Rating frequency(Hz)	Inpurt power(w)	Rated current(A)	Temperature range (℉)	Refrigerant	Amount(oz)	Dimension (in)	Volume (cu.ft)
Single-door freezer	MBF8001GR	115	60	610	6.3	-8~-1	R290	4.2	28.7×33.3×81.3	21.4
Two-door freezer	MBF8002GR	115	60	935	8.6	-8~-1	R290	5.3	51.7×33.3×81.3	43.16
Three-door freezer	MBF8003GR	115/ 208-230	60	1360	6.2	-8~-1	R290	5.3	77.8×33.3×81.3	64.88
Single-door refrigerator	MBF8004GR	115	60	250	2.1	+33~+45	R290	3.9	28.7×33.3×81.3	21.4
Two-door refrigerator	MBF8005GR	115	60	370	3.2	+33~+45	R290	4.9	51.7×33.3×81.3	43.16
Three-door refrigerator	MBF8006GR	115	60	470	4 .2	+33~+45	R290	5.3	77.8×33.3×81.3	64.88
Half two door freezer	MBF8007GR	115	60	610	6.3	-8~-1	R290	4.2	28.7×33.3×81.3	21.4
Half four door freezer	MBF8008GR	115	60	935	8.6	-8~-1	R290	5.3	51.7×33.3×81.3	43.16
Half six door freezer	MBF8009GR	115/ 208-230	60	1360	6.2	-8~-1	R290	5.3	77.8×33.3×81.3	64.88
Half two door refrigerator	MBF8010GR	115	60	250	2.1	+33~+45	R290	3.9	28.7×33.3×81.3	21.4
Half four door refrigerator	MBF8011GR	115	60	370	3.2	+33~+45	R290	4.9	51.7×33.3×81.3	43.16
Half six door refrigerator	MBF8012GR	115	60	470	4 .2	+33~+45	R290	5.3	77.8×33.3×81.3	64.88

NOTES :If the technical data has any changes, we will not notify you any longer.

Bottom Mount Reach-Ins

Product Description	Model code	Power source (V)	Rating frequency(Hz)	Inpurt power(w)	Rated current(A)	Temperature range (°F)	Refrigerant	Amount(oz)	Dimension (in)	Volume (cu.ft)
Single-door freezer	MBF8501GR	115	60	610	6.3	-8~-1	R290	4.2	27×31.5×84	19.1
Two-door freezer	MBF8502GR	115	60	935	8.6	-8~-1	R290	5.3	39.5×31.5×84	30.2
Two-door freezer	MBF8503GR	115	60	935	8.6	-8~-1	R290	54.5	54.5×31.5×84	44.77
Three-door freezer	MBF8504GR	115/ 208-230	60	1360	6.2	-8~-1	R290	5.3	81.85×31.5×84	67.99
Single-door refrigerator	MBF8505GR	115	60	250	2.1	+33~+45	R290	3.9	27×31.5×84	19.1
Three-door refrigerator	MBF8506GR	115	60	370	3.2	+33~+45	R290	4.9	39.5×31.5×84	30.2
Two-door refrigerator	MBF8507GR	115	60	370	3.2	+33~+45	R290	4.9	54.5×31.5×84	44.7
Three-door refrigerator	MBF8508GR	115	60	470	4.2	+33~+45	R290	5.3	81.85×31.5×84	67.99
Single-door refrigerator	MBF8519GR	115	60	250	2.1	+33~+45	R290	3.9	24.2×24×63.2	8.3

NOTES :If the technical data has any changes, we will not notify you any longer.

OFFICIAL APPROVAL AND RULES

CONFORMS TO UL STD.471
CERTIFIED TO CSA STD.C22.2 NO.120
CONFORMS TO NSF/ANSI STD. 7

ETL CM C US LISTED
Intertek
4003935
CONFORMS TO UL STD.471
CERTIFIED TO CSA STD.C22.2 NO.120

ETL CM SANITATION LISTED
Intertek
4003935
CONFORMS TO NSF/ANSI STD.7

W081107703

version number 20200721